Ceiling ,wall And Pendant Luminaires

GLM-DOR450D

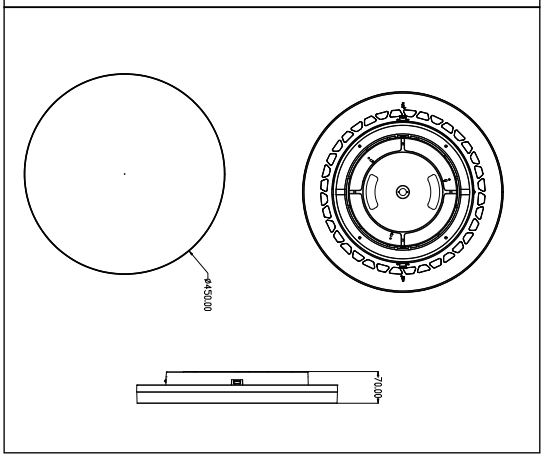

Produktmerkmale

Modle NO	GLM-DOR450D
Size	Φ450*70
Input Power	28/32/36W
Current	200/230/260mA
lumen Efficiency	120LM/W
Lumens Output	3360/3840/4320LM
CCT	3/4/6000K Switchable
AC Input	AC200-240V
LED	SMD2835
LED Quantity	576pcs
Driver	AGT
CRI	>90
SDCM	<4
Output Voltage	DC110-150V
Frequency	50/60Hz
Power Factor	>0.9
Materia	PC
IK Level	IK10
Protection Level	IP54
Package size	L480xW435xH480mm
QTY/Carton	5pcs
Lifespan	50,000HS
Certificate	ENEC/CE/ROHS 680℃
Operating Temperature	-20°C-45°C

Description

-Circular LED wall lights and polycarbonate lampshades for ceiling lights,

-A simple lamp installation adapter can be installed on walls or ceilings.

-Double sided fast shutter, suitable for tool free illumination housing installation

On the adapter.

-LED-SMD technology on metal core board has good heat dissipation performance

-The color temperature of 3000K or 4000K or 6000K can be adjusted by sliding

Before installation, turn on the back of the light.

-Ra 90 color reproduction.

-Adjustable to 28 watts, 32 watts, or 36 watts.

-Pressing type terminal block, luminous flux 3360-4320lm depending on color

Temperature and power.

-Size: Φ450* 70 millimeters.

-Impact strength IK10, protection level IP54.

-The service life of this product is 50000 hours (L80 | B10). CE mark.

ENEC certification.

-Standards: EN 60598-1, EN 60598-2-1,

-EN 62471、EN 62493、EN 55015、EN 61000-3-2

EN 610-3-3，EN 61547

Light Distribution

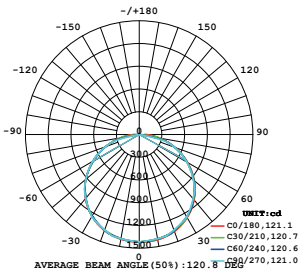

Energy Efficiency Rating

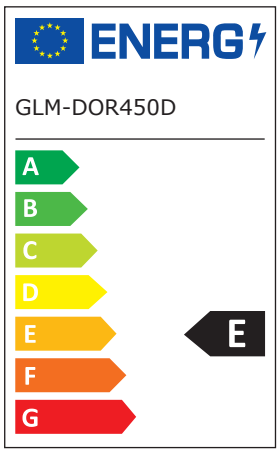

RoHS CE 5YEAR WARRANTY lumen 120LM/W

Shenzhen Gleamia Lighting

Tel:+86-755-89589529 Fax:+86-755-89507460 Email: mark@gleamia.net Web:www.gleamia.net

Add:2nd Floor,Block C,Building 1,Hisense Science & Technology Park,Longgang, Shenzhen,China